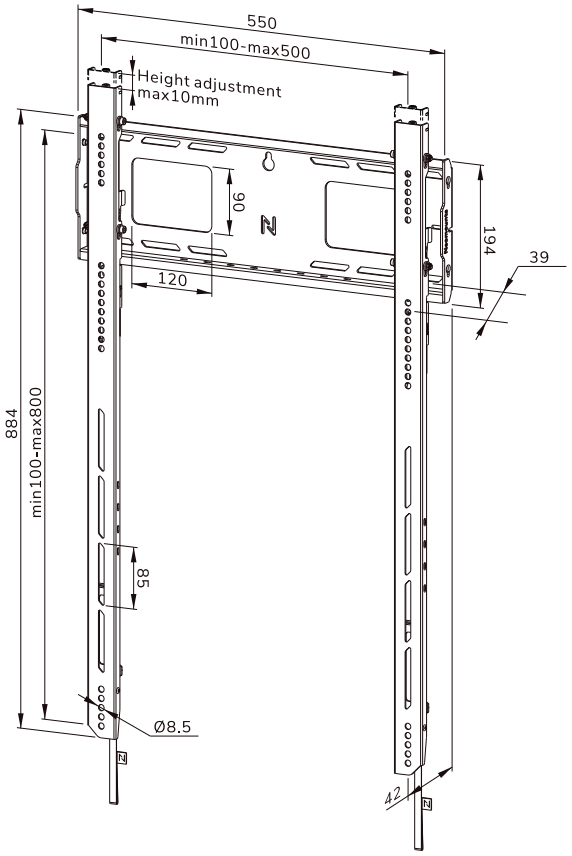

Measuring unit: mm

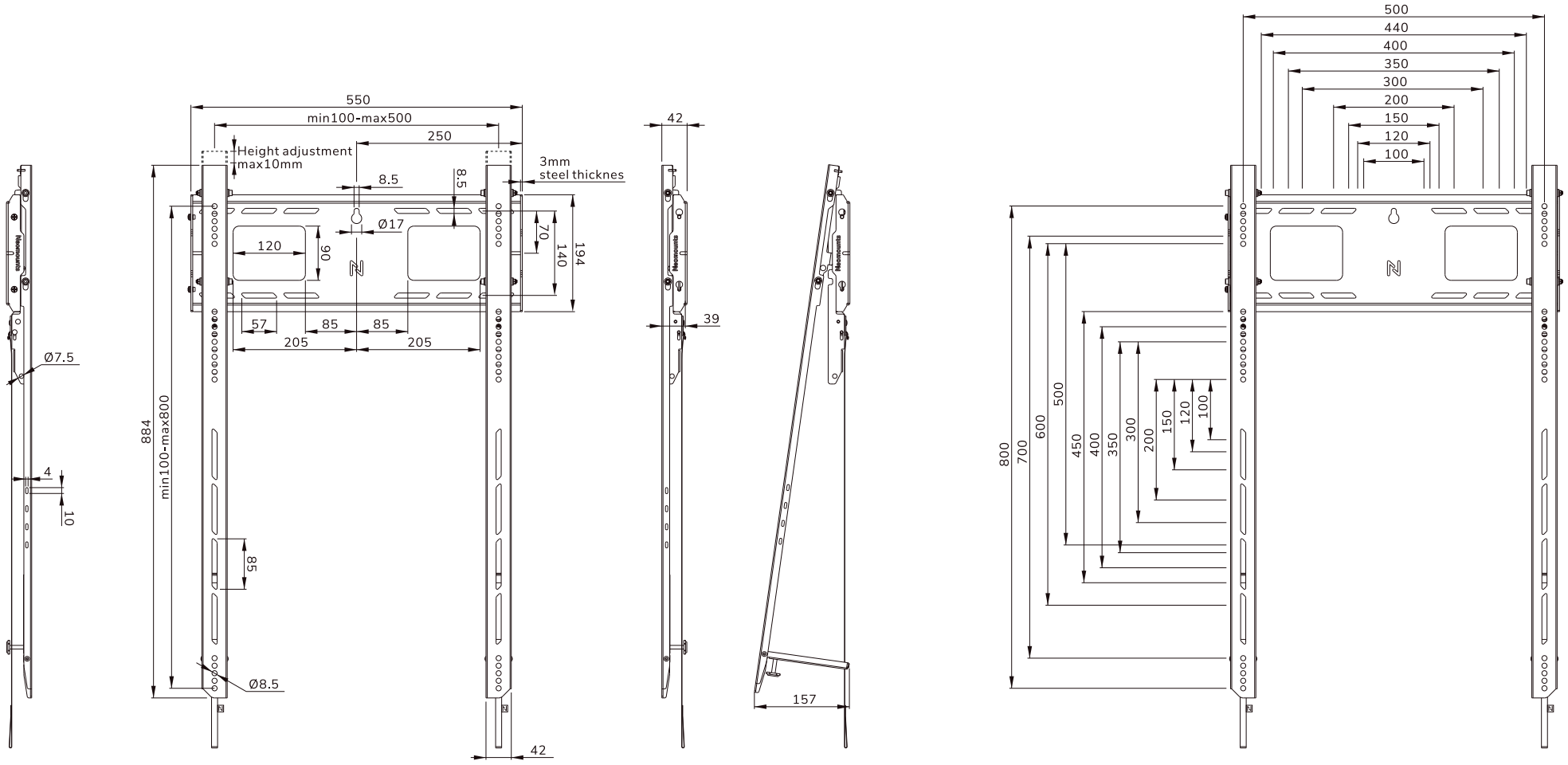

Neomounts

Measuring unit: mm